1. Vsi elementi prikazane konstrukcije imajo enak prečni prerez.
   a. Ob predpostavki, da je vpliv osnih sil na pomike zanemarljiv, določi potek notranjih sil po konstrukciji.
   b. Določi in skiciraj potek normalnih in strižnih napetosti v prerezu 1–1.
   c. Določi zasuk točke B.

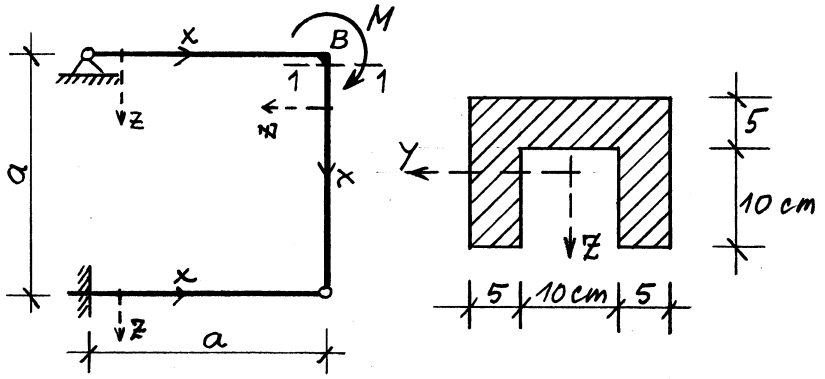

$E = 20\,000\,kN/cm^2$

$a = 3\,m$

$M = 120\,kNm$

2. Ob predpostavki, da gre za čisto torzijo, določi navpični pomik konca previsa A ter strižno napetost v rebru CD. Za koliko se spremeni poves točke A, če rebro CD odstranimo?

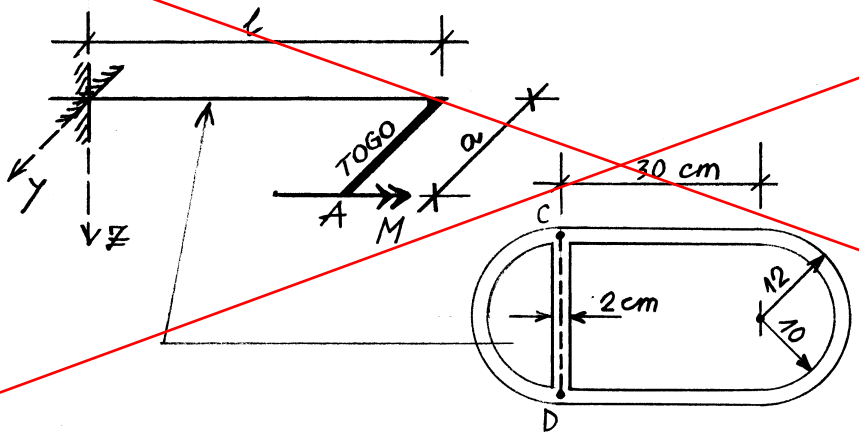

$E = 24\,000\,kN/cm^2$

$G = 8\,000\,kN/cm^2$

$l = 3\,m$

$a = 1.8\,m$

$M = 50\,kNm$

3. Steber AB je narejen iz dveh C-profilov, ki sta med seboj povezana tako, da deluje kot monoliten element. Določi dimenzijo e tako, da bo uklonska varnost v smereh y in z enaka. Določi obtežbo Q_{cr}, pri kateri nastopi v stebru kritična osna sila.

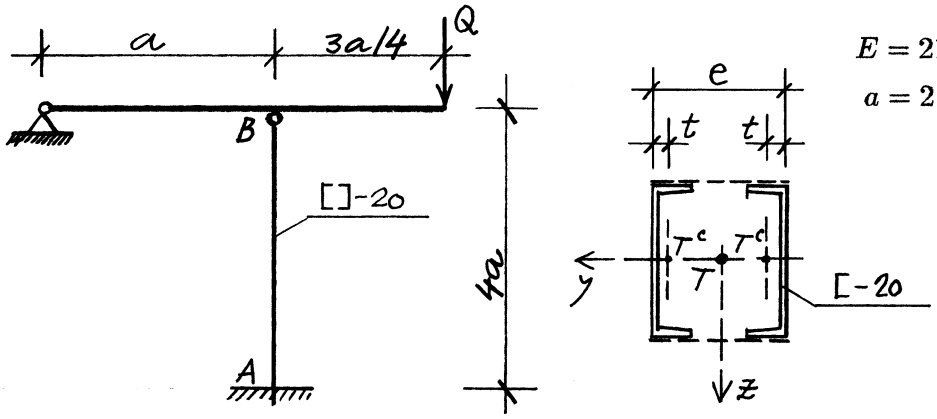

$E = 21\,000\,kN/cm^2$

$a = 2\,m$

Podatki o profilu C–20:

$A_x^c = 32.2\,cm^2, \quad I_y^c = 1910\,cm^4, \quad I_z^c = 148\,cm^2, \quad t = 2.01\,cm$

Ad 1.

$$A_x = 5\cdot 20 + 2\cdot 5\cdot 10 = \underline{200\ cm^2}$$

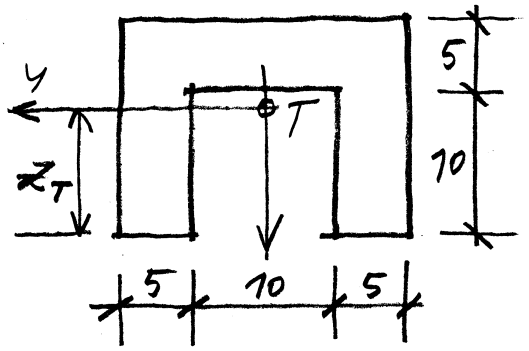

$$z_T = \frac{1}{200}\left(2\cdot 50\cdot 5 + 100\cdot 12{,}5\right)$$

$$\underline{z_T = 8{,}75\ cm}$$

$$I_y = \frac{1}{12}\left(20\cdot 15^3 - 10^4\right) +$$

$$+ 20\cdot 15\cdot 1{,}25^2 - 10\cdot 10\cdot 3{,}75^2$$

$$\underline{I_y = 3854\ cm^4}$$

a)

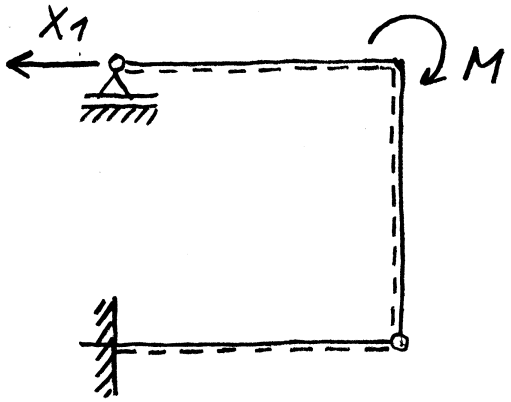

$$a_{11} X_1 + b_1 = 0$$

$$X_1 = -\frac{b_1}{a_{11}}$$

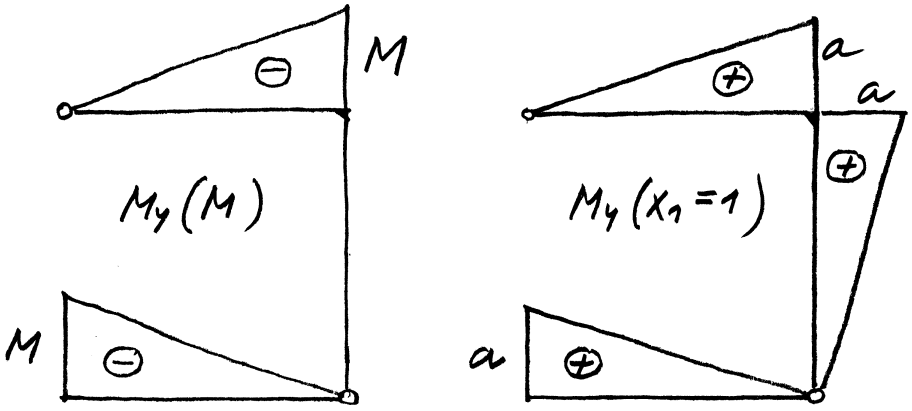

$$EI_y\, a_{11} = 3\cdot\frac{a^2}{2}\cdot\frac{2a}{3} = a^3 \longrightarrow a_{11} = \frac{a^3}{EI_y}$$

$$-EI_y\, b_1 = 2\cdot M\frac{a}{2}\cdot\frac{2a}{3} = M\cdot\frac{2a^2}{3} \longrightarrow b_1 = -M\frac{2a^2}{3EI_y}$$

$$\boxed{X_1 = \frac{2M}{3a}} \longrightarrow X_1 = \frac{2\cdot 120}{3\cdot 3} \longrightarrow \boxed{X_1 = 26{,}67\ kN}$$

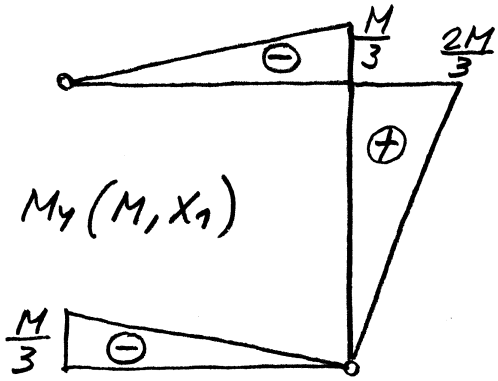

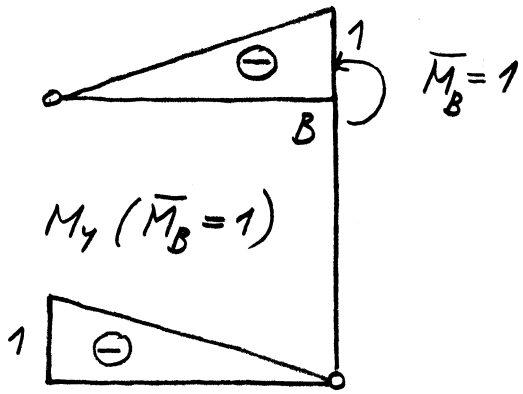

$$\omega_y(B) = \frac{1}{EI_y} \cdot 2 \cdot \frac{M}{3} \cdot \frac{a}{2} \cdot \frac{2}{3} \longrightarrow \boxed{\omega_y(B) = M \cdot \frac{2a}{9EI_y}}$$

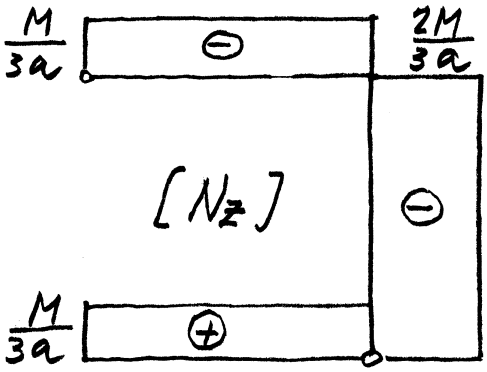

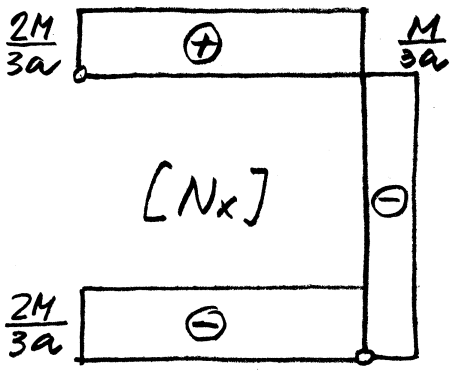

b) $\boxed{\omega_y(B) = 0{,}0104}$

c) 1–1 : $M_y = \frac{2M}{3}$, $N_x = -\frac{M}{3a}$, $N_z = -\frac{2M}{3a}$

$M_y = 8000$ kNcm , $N_x = -13{,}33$ kN

$N_z = -26{,}67$ kN

$$\boxed{\sigma_{xx} = \frac{N_x}{A_x} + \frac{M_y}{I_y} z}$$

$$\sigma_{xx}^{z} = -\frac{13{,}33}{200} - \frac{8000}{3854} \cdot 6{,}25 \longrightarrow \boxed{\sigma_{xx}^{z} = -13{,}04 \text{ kN/cm}^2}$$

$$\sigma_{xx}^{s} = -\frac{13{,}33}{200} + \frac{8000}{3854} \cdot 8{,}75 \longrightarrow \boxed{\sigma_{xx}^{s} = 18{,}10 \text{ kN/cm}^2}$$

$$z = -1{,}25 \text{ cm} \longrightarrow S_y^* = -100 \cdot 3{,}75 = -375 \text{ cm}^3$$

$$z = 0 \longrightarrow S_y^* = -375 - 2 \cdot 1{,}25 \cdot 5 \cdot 0{,}625 = -382{,}8 \text{ cm}^3$$

$$\boxed{\sigma_{xz} = -N_z \frac{S_y^*}{b^* I_y}}$$

$z = -1{,}25$ cm : $\sigma_{xz}^{P} = 26{,}67 \cdot \frac{-375}{20 \cdot 3854} = -0{,}13$ kN/cm²

$b_p^* = 20$ cm

$b_s^* = 10$ cm $\quad \sigma_{xz}^{S} = -0{,}26$ kN/cm²

$z = 0$: $\sigma_{xz}^{T} = 26{,}67 \cdot \frac{-382{,}8}{10 \cdot 3854} = -0{,}265$ kN/cm²

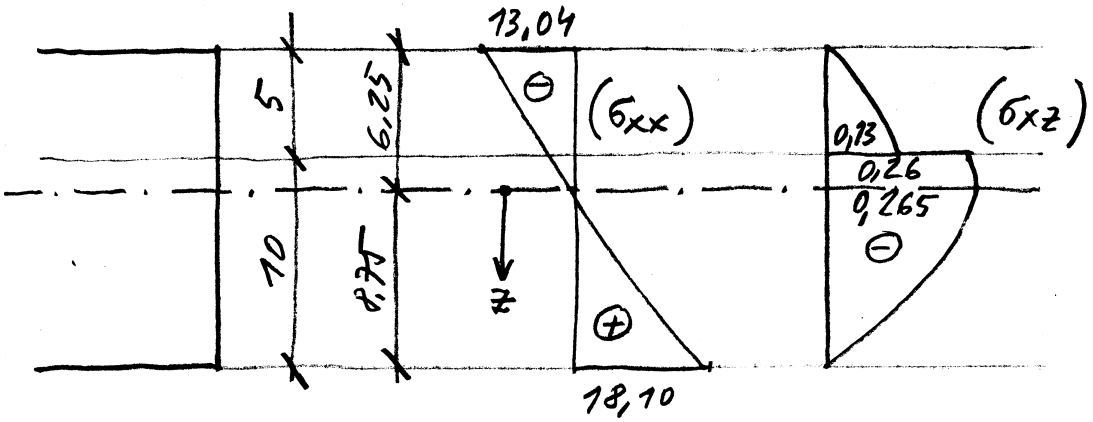

Ad 2.)

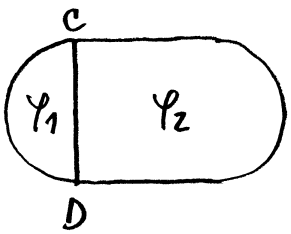

$A_1 = \frac{1}{2}\pi \cdot 11^2 = 190$ cm²

$A_2 = 190 + 30 \cdot 22 = 850$ cm²

$a_{11} = -\frac{1}{2}(22 + 11\pi) = -28{,}3$

$a_{22} = -\frac{1}{2}(22 + 11\pi + 2 \cdot 30) = -58{,}3$

$a_{12} = a_{21} = \frac{1}{2} \cdot 22 = 11$

$$\left.\begin{aligned} -28{,}3\,\varphi_1 + 11\,\varphi_2 &= -380 \\ 11\,\varphi_1 - 58{,}3\,\varphi_2 &= -1700 \end{aligned}\right\} \quad \boxed{\begin{aligned} \varphi_1 &= 26{,}7 \\ \varphi_2 &= 34{,}2 \end{aligned}}$$

$$I_x = 2(190 \cdot 26{,}7 + 850 \cdot 34{,}2) \rightarrow \boxed{I_x = 68\,286 \text{ cm}^4}$$

$$\omega_x(x=\ell) = M \cdot \frac{\ell}{G I_x} = \frac{5000 \cdot 300}{8000 \cdot 68286} = 0{,}00275$$

$$w_A = \omega_x(\ell) \cdot a = 0{,}00275 \cdot 180 \rightarrow \boxed{w_A = 0{,}494 \text{ cm}}$$

$$\tau_{CD} = \frac{M_x}{I_x} \cdot \frac{\varphi_2 - \varphi_1}{\delta} = \frac{5000(34{,}2 - 26{,}7)}{68286 \cdot 2}$$

$$\boxed{\tau_{CD} = 0{,}275 \text{ kN/cm}^2}$$

Primer brez rebra:

$$A_s = A_1 + A_2 = 190 + 850 \longrightarrow A_s = 1040 \text{ cm}^4$$

$$\oint_{C_s} \frac{d\xi}{\delta} = (2 \cdot 11 \cdot \pi + 2 \cdot 30) \cdot \frac{1}{2} = 64{,}56$$

$$I_x = \frac{4 A_s^2}{\oint_{C_s} \frac{d\xi}{\delta}} = \frac{4 \cdot 1040^2}{64{,}56} \longrightarrow \boxed{I_x = 67\,016 \text{ cm}^4}$$

$$\omega_x(\ell) = \frac{5000 \cdot 300}{8000 \cdot 67016} = 0{,}00280$$

$$w_A = 0{,}00280 \times 180 \longrightarrow \boxed{w_A = 0{,}504 \text{ cm}}$$

<u>Ad 3.)</u> $I_y = 2 \cdot I_y^c = 2 \cdot 1910 \rightarrow I_y = 3820 \text{ cm}^4$

$$I_z = 2 \cdot I_z^c + 2 \cdot A_x^c \cdot f^2 = 2 \cdot 148 + 2 \cdot 32{,}2 \cdot f^2 = 3820$$

$$f = 7{,}40 \text{ cm} \quad \ldots \quad e = 2(f + t) \rightarrow \boxed{e = 18{,}82 \text{ cm}}$$

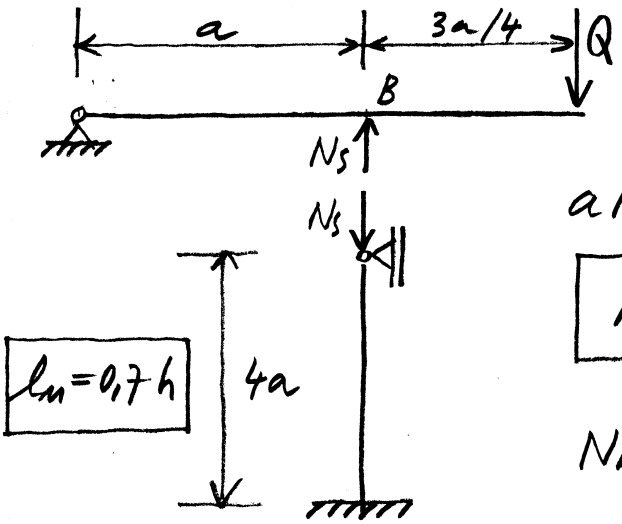

$$a N_S = Q\left(a + \frac{3a}{4}\right)$$

$$\boxed{N_S = \frac{7Q}{4}} \rightarrow \quad N_S = N_{kr} \; !$$

$$N_{kr} = \frac{\pi^2 E I_{min}}{l_u^2}$$

$$N_{kr} = \frac{\pi^2 \cdot 21000 \cdot 3820}{(0{,}7 \cdot 4 \cdot 200)^2} \longrightarrow \boxed{N_{kr} = 2524{,}68 \text{ kN}}$$

$$N_S = N_{kr} \longrightarrow \quad Q = \frac{4}{7} \cdot 2524{,}68$$

$$\boxed{Q_{kr} = 1442{,}7 \text{ kN}}$$